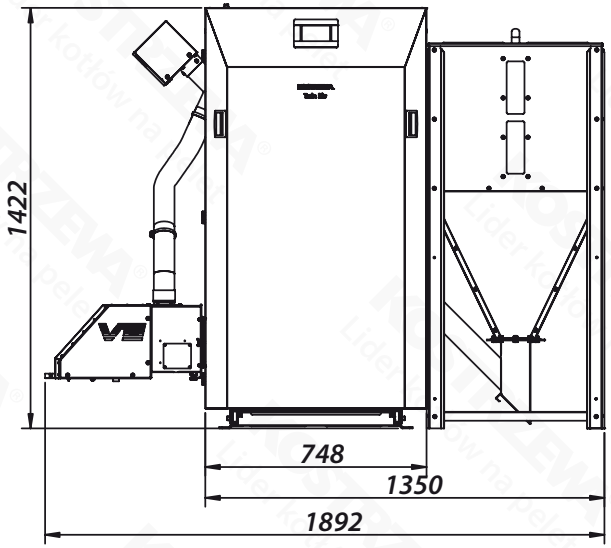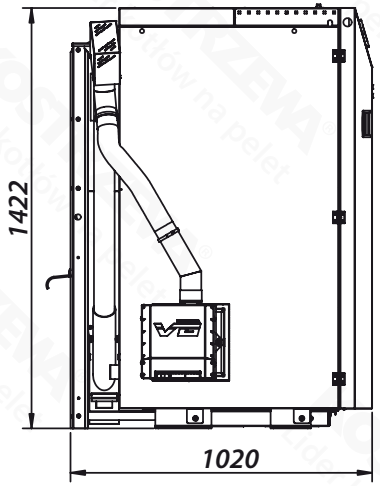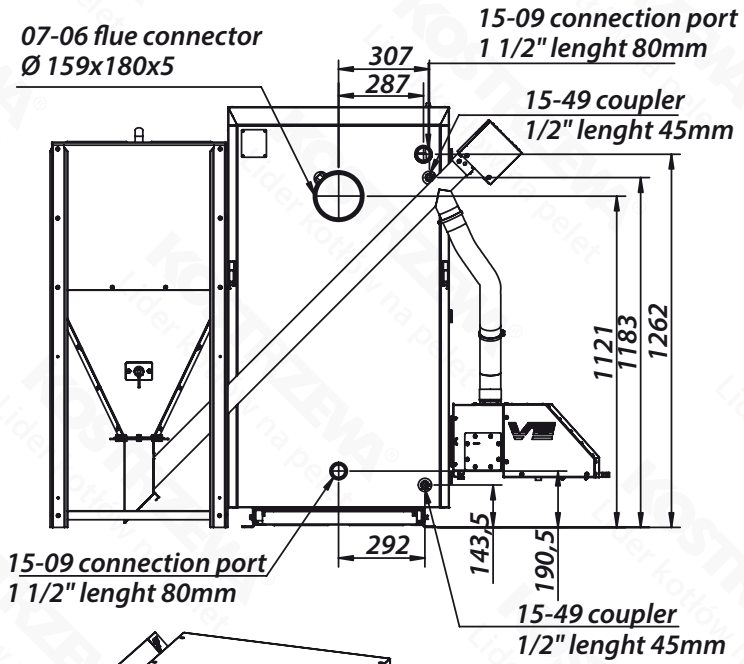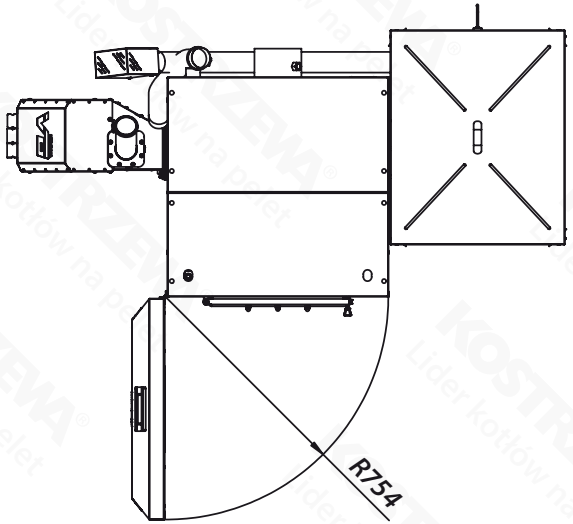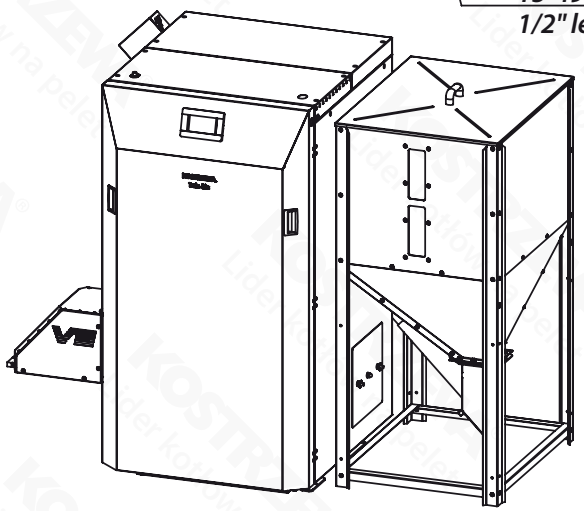Dimensions - Twin Bio Luxury **32 kW**